SHARP DV-7032SC
Chassis 4BS-C

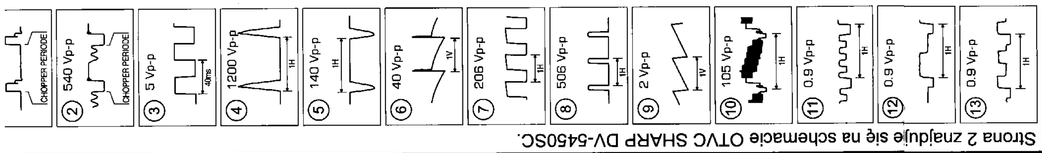

Strona 2 znajduje się na schemacie OTVC SHARP DV-5450SC.

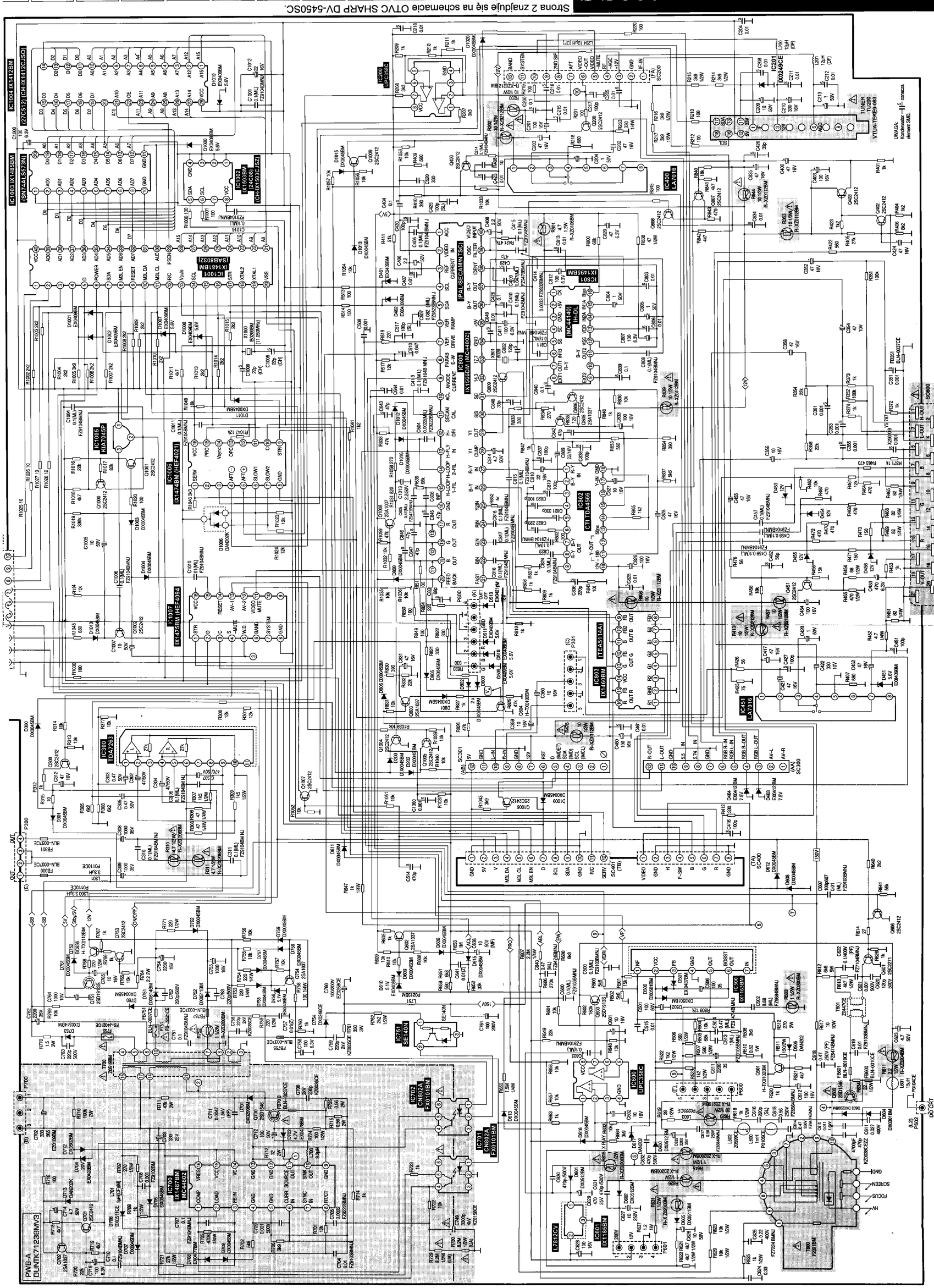

CONTROL

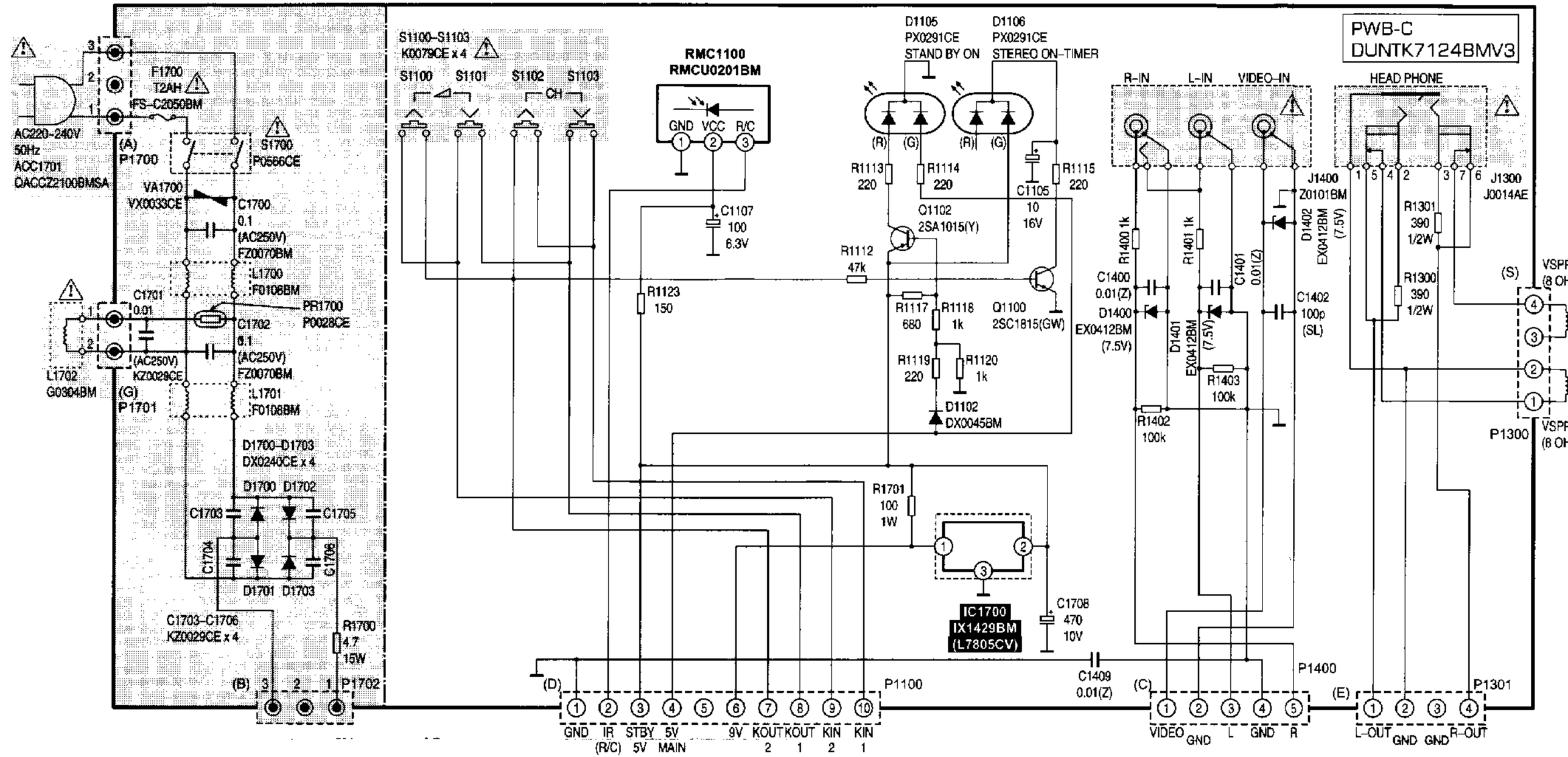
PWB-C
DUNTK7124BMV3
AC220-240V
50Hz
ACC1701
DACCZ2100BMSA
F1700
T2AH
FS-C2050BM
(A)
P1700
S1700
P0566CE
VA1700
VX0033CE
C1700
0.1
(AC250V)
FZ0070BM
L1700
F0108BM
C1701
0.01
PR1700
P0028CE
C1702
0.1
(AC250V)
FZ0070BM
L1702
G0304BM
(G)
P1701
(AC250V)
KZ0029CE
L1701
F0108BM
D1700–D1703
DX0240CE x 4
D1700 D1702
C1703
C1705
C1704
C1706
D1701 D1703
C1703–C1706
KZ0029CE x 4
R1700
4.7
15W
(B)
P1702
S1100–S1103
K0079CE x 4
S1100 S1101 S1102 S1103
CH
RMC1100
RMCU0201BM
GND VCC R/C
C1107
100
6.3V
R1123
150
D1105
PX0291CE
STAND BY ON
D1106
PX0291CE
STEREO ON–TIMER
(R) (G)
R1113
220
R1114
220
Q1102
2SA1015(Y)
R1112
47k
R1117
680
R1118
1k
R1119
220
R1120
1k
D1102
DX0045BM
C1105
10
16V
R1115
220
Q1100
2SC1815(GW)
R1701
100
1W
IC1700
IX1429BM
(L7805CV)
C1708
470
10V
C1409
0.01(Z)
R-IN
L-IN
VIDEO-IN
J1400
Z0101BM
R1400 1k
R1401 1k
C1400
0.01(Z)
D1400
EX0412BM
(7.5V)
D1401
EX0412BM
(7.5V)
C1401
0.01(Z)
D1402
EX0412BM
(7.5V)
C1402
100p
(SL)
R1403
100k
R1402
100k
HEAD PHONE
J1300
J0014AE
R1301
390
1/2W
R1300
390
1/2W
(S)
P1300
P1400
P1100
P1301
(D)
GND IR STBY 5V 9V KOUT KOUT KIN KIN
(R/C) 5V MAIN 2 1 2 1
(C)
VIDEO GND L GND R
(E)
L-OUT GND GND R-OUT

CRT SOCKET

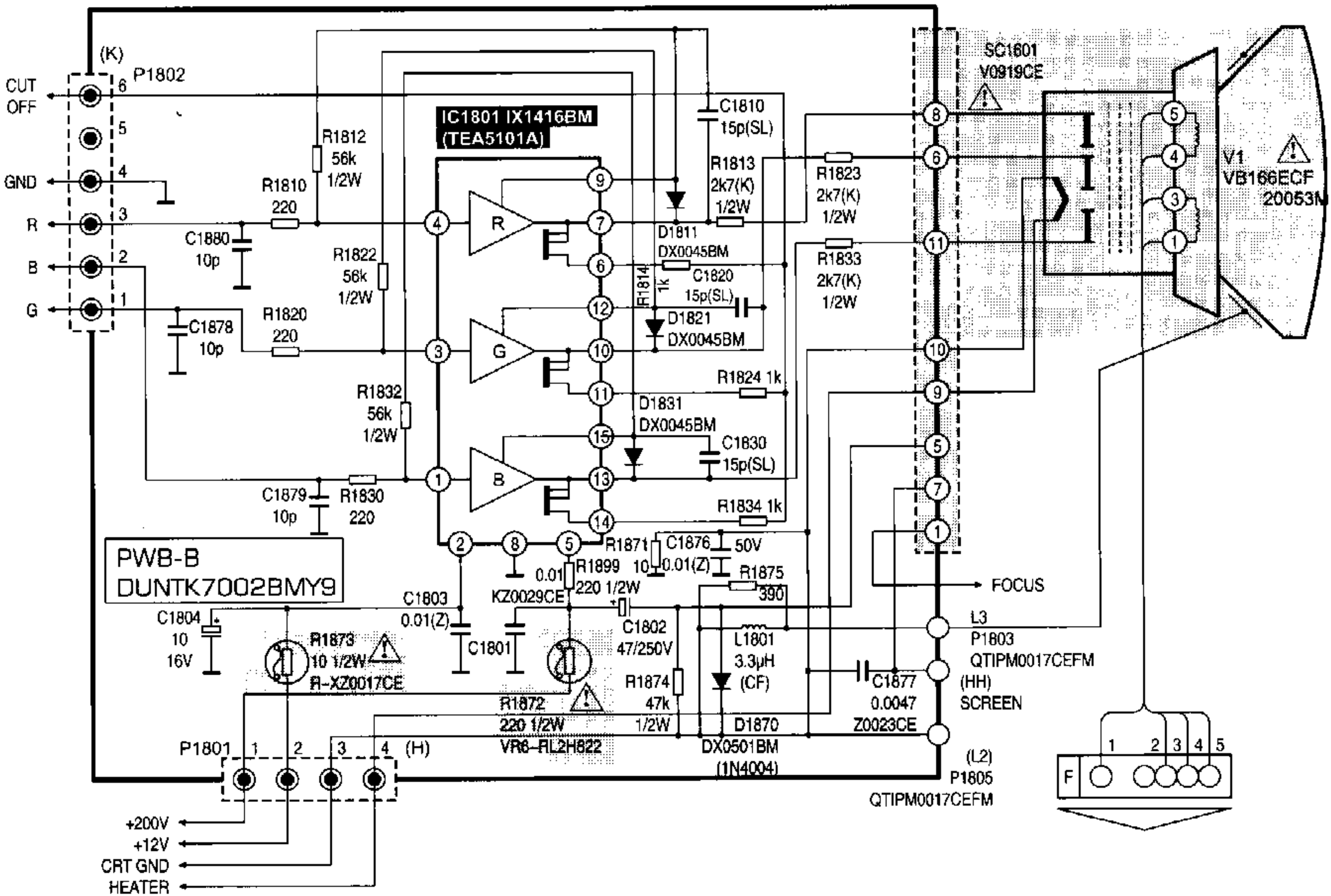
(K)
P1802
CUT OFF
GND
R
B
G
IC1801 IX1416BM
(TEA5101A)
R1812
56k
1/2W
R1810
220
C1880
10p
R1822
56k
1/2W
R1820
220
C1878
10p
R1832
56k
1/2W
C1879
10p
R1830
220
C1810
15p(SL)
R1813
2k7(K)
1/2W
D1811
DX0045BM
R1814
1k
C1820
15p(SL)
D1821
DX0045BM
R1824 1k
D1831
DX0045BM
C1830
15p(SL)
R1834 1k
R1871
10
C1876
0.01(Z)
50V
R1899
220 1/2W
0.01
KZ0029CE
R1875
390
C1802
47/250V
L1801
3.3μH
(CF)
R1874
47k
1/2W
D1870
DX0501BM
(1N4004)
C1877
0.0047
Z0023CE
R1823
2k7(K)
1/2W
R1833
2k7(K)
1/2W
SC1601
V0919CE
V1
VB166ECF
20053N
FOCUS
L3
P1803
QTIPM0017CEFM
(HH)
SCREEN
(L2)
P1805
QTIPM0017CEFM
PWB-B
DUNTK7002BMY9
C1804
10
16V
R1873
10 1/2W
R-XZ0017CE
C1803
0.01(Z)
C1801
R1872
220 1/2W
VR6-RL2H822
P1801
(H)
+200V
+12V
CRT GND
HEATER
F

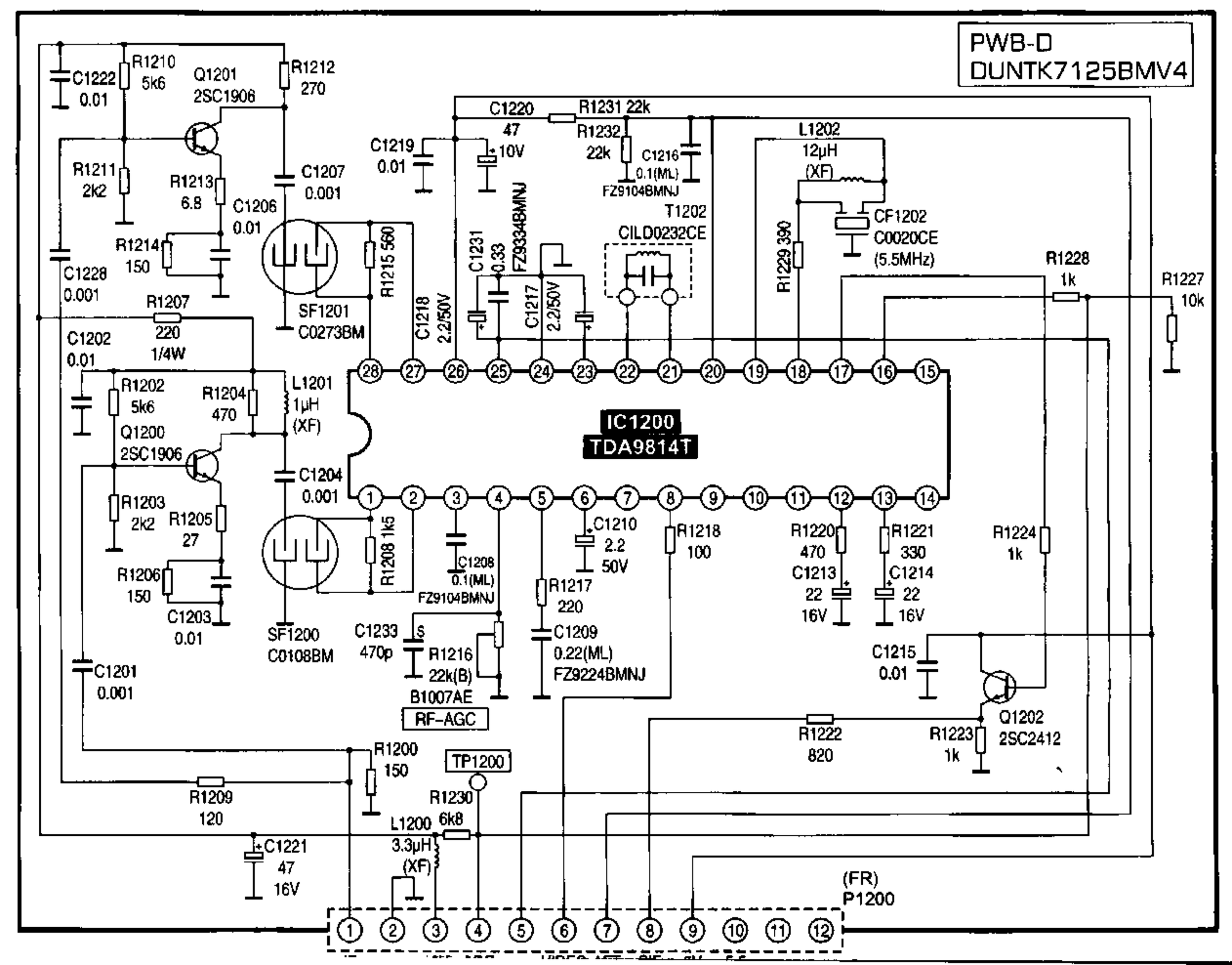
PWB-D
DUNTK7125BMV4
C1222 0.01
R1210 5k6
Q1201 2SC1906
R1212 270
R1211 2k2
R1213 6.8
C1206 0.01
C1207 0.001
R1214 150
C1228 0.001
SF1201 C0273BM
R1215 560
C1219 0.01
C1220 47 10V
R1231 22k
R1232 22k
C1216 0.1(ML) FZ9104BMNJ
L1202 12μH (XF)
CF1202 C0020CE (5.5MHz)
T1202 CILD0232CE
C1231 0.33 FZ9334BMNJ
C1218 2.2/50V
C1217 2.2/50V
R1229 390
R1228 1k
R1227 10k
R1207 220 1/4W
C1202 0.01
R1202 5k6
R1204 470
L1201 1μH (XF)
Q1200 2SC1906
C1204 0.001
IC1200 TDA9814T
R1203 2k2
R1205 27
R1206 150
C1203 0.01
SF1200 C0108BM
R1208 1k5
C1208 0.1(ML) FZ9104BMNJ
C1210 2.2 50V
R1218 100
R1220 470
C1213 22 16V
R1221 330
C1214 22 16V
R1224 1k
R1217 220
C1209 0.22(ML) FZ9224BMNJ
C1233 470p
R1216 22k(B) B1007AE
RF-AGC
C1201 0.001
C1215 0.01
Q1202 2SC2412
R1222 820
R1223 1k
R1200 150
TP1200
R1209 120
R1230 6k8
L1200 3.3μH (XF)
C1221 47 16V
(FR) P1200